Requirements for using a plek station

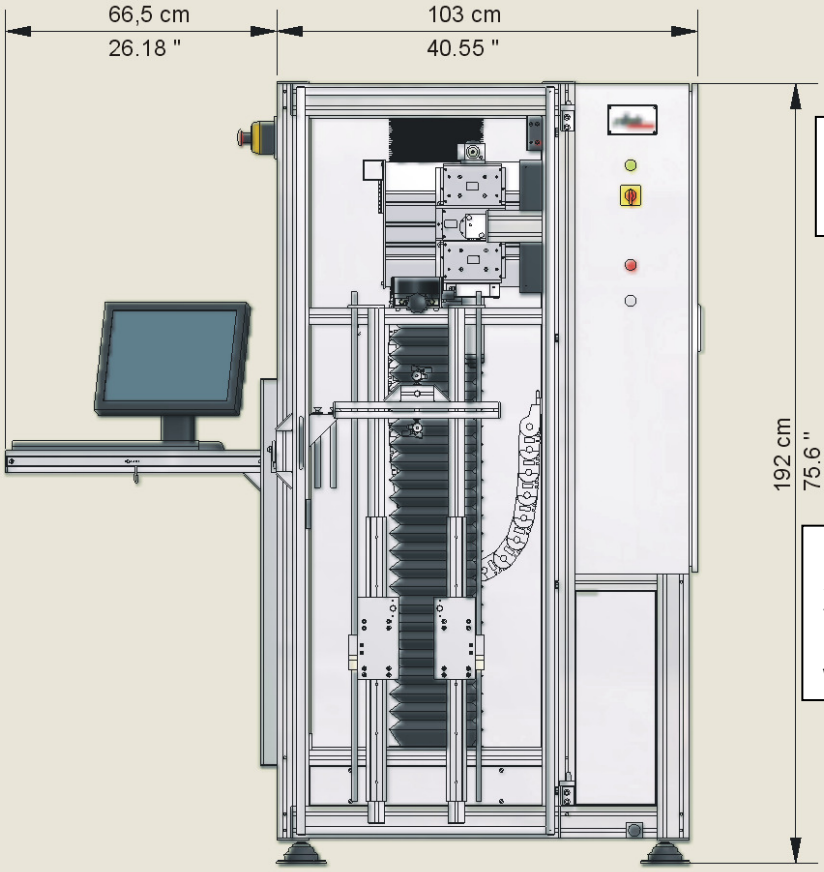

Space for **the machine**

Lifting device (fork lift, crane, etc.) for moving shipping crate: 400-500 kg (880-1100 lbs)

Power
AC 110-230 V, fuse 15 A

If you wish to protect the PLEK STATION in the event of a power failure **we recommend** using a UPS (**uninterruptible power supply**) with a power of approx. 1000 W.

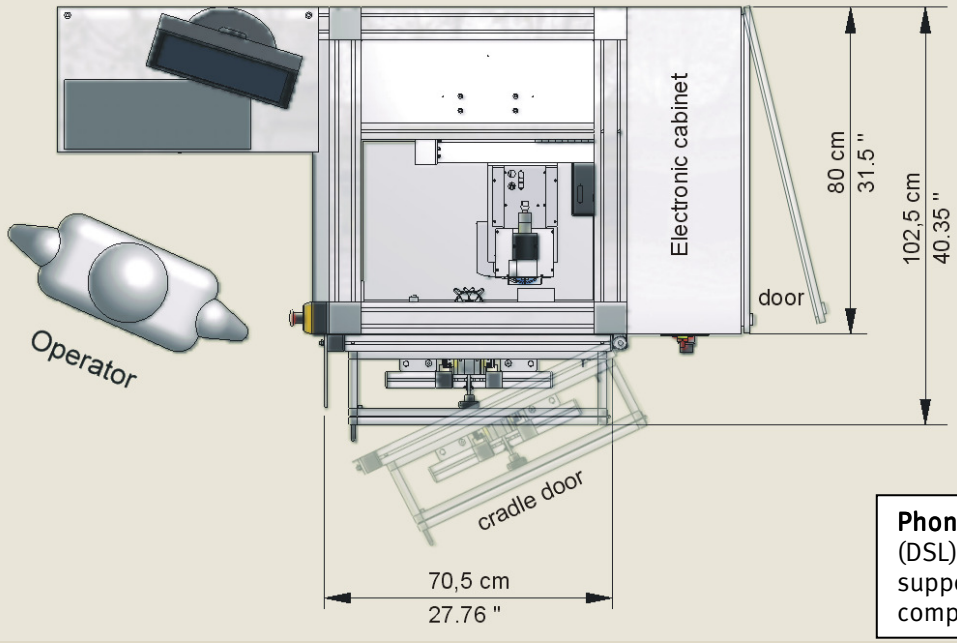

Manpower:
Any person with a basic knowledge of MS Windows and guitars. An operator can be trained in 2-3 days.

Phone line and **internet access** (DSL) is required for online support/ maintenance via remote computer.

plek® the optimum in tone & playability